COLLISION INDUSTRY
CONFERENCE

Technical Committee

Presented by:
T0by Chess & Kye Yeung, Co-Chairs

COLLISION INDUSTRY
CONFERENCE

Why OEM Data for Vehicle Repair

Toby Chess and Kye Yeung
SEMA-Las Vegas, NV
October 2017

Identical Platforms with 3 Exceptions

2012 Honda Accord

2013 Honda Accord

Question: What is the major difference between two Honda Accords?
Answer: The”A”Pillar reinforcement,”B” pillar reinforcement and Rocker panel reinforcement are constructed of one of the highest strengths steels seen in passenger cars. They have an 1500 MPa steel rating.

2013 Honda Accord has ultra strength steel in the A pillar, “B” pillar and Rocker reinforcement

1,500 MPa (HOT STAMP) STEEL LOCATIONS

1,500 MPa steel is stronger than ordinary steel, so it can help protect vehicle occupants while reducing overall vehicle weight to improve fuel efficiency.

The numbered parts in the diagrams below are constructed of 1,500 MPa steel:

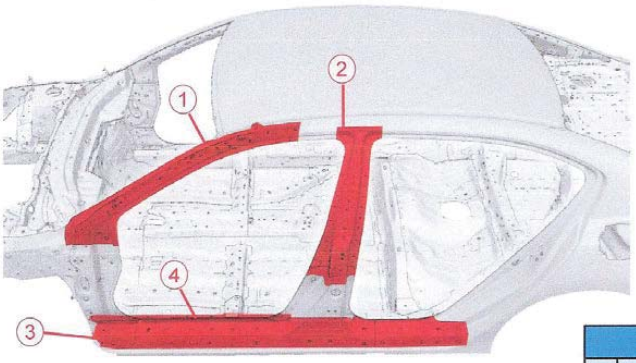

4-Door Models	
1	Front Inner Upper Pillar
2	Center Pillar Upper Stiffener
3	Side Sill Stiffener
4	Inside Sill Reinforcement

Question: What does Honda say when these parts are damaged from a side impact?
Answer—Plenty
First and Formost—Honda states “No body repairs should be attempted without first referring to the appropriate body repair manual for complete information”. I find it amazing how many collision repair shops in this country will repair/replace structural components on today’s vehicles without having the appropriate procedures when the vehicle is estimated and repaired. I also find in appalling that many insurance adjusters will estimate a vehicle without having repair data before writing their estimate. Furthermore, why do body shops have to prove that they need a certain procedure for a OEM stated position, when they should have this information as well. Just the other day, A shop owner called me for information to justify why the shop could not use heat on repairing a 2010 Toyota Tacoma frame that was damaged in the rear. Moreover, I feel that there should be a charge on the estimate for data retrieval. It cost me $300.00 for a one year subscription to the Honda web site and I don’t have a shop or write estimates anymore. Sorry for getting off the subject, but I needed to get it off my chest.
Use of Heat for body straightening and repairs. What does Honda say. “When you are doing body straightening and repair procedures: DO NOT apply heat to any body part during straigtening. This may compromise the internal structure and strength of high strength steel parts. Moreover, any part that has heat applied to it during straightening MUST be replaced with new parts. Ignoring these instructions, may significantly reduce occupant protection in any subsequent collision.”

2017 Chevrolet Vehicles

2017 Chevrolet Traverse

2017 Chevrolet Volt

2017 Chevrolet Malibu

COLLISION INDUSTRY CONFERENCE

OEM procedures for same year chevrolet vehicles

- Chevrolet Malibu—OEM procedures call for STRSW, MIG plug and MIG Weld Brazing for the roof installation
- Chevrolet Volt—OEM procedures call for STRSW, MIG plug welds and Adhesive
- Chevrolet Traverse-OEM procedures call for STRSW & MIG plug

Ford OEM Procedure for replacing from frame rail section on 2013 F150

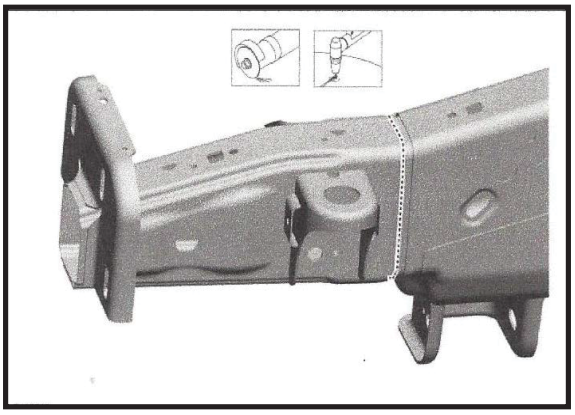

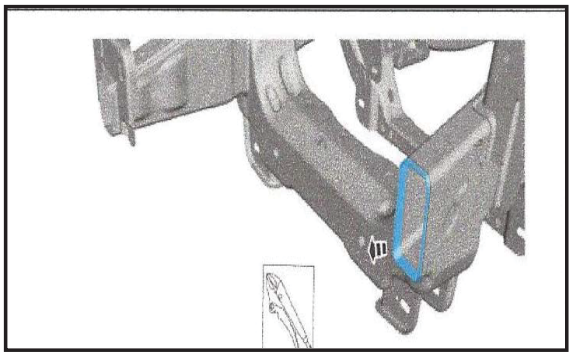

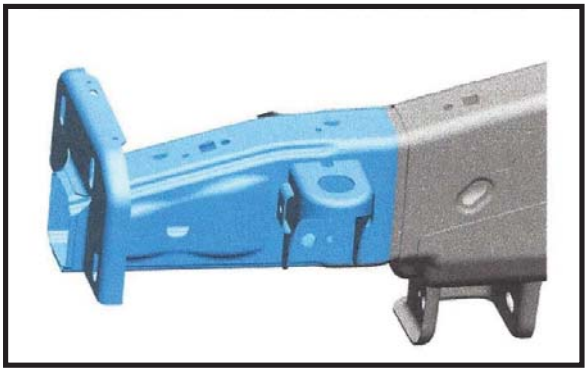

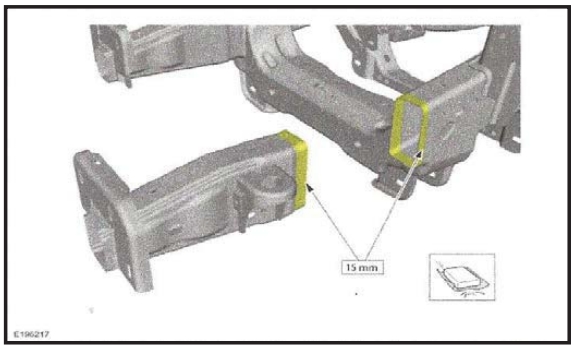

COLLISION INDUSTRY
CONFERENCE

What Ford OEM Procedures state about the welding wire and equipment to replace the section

Weld the joint completely around the perimeter, if fit and alignment are correct, using a Metal Inert Gas (MIG) welding machine capable of producing a minimum of 200 amps. Use 0.9-1.1 mm (0.035-0.045 in) ER70S-3 or equivalent weld wire that is compatible with mild (Society of Automotive Engineers (SAE) 1010) steel.

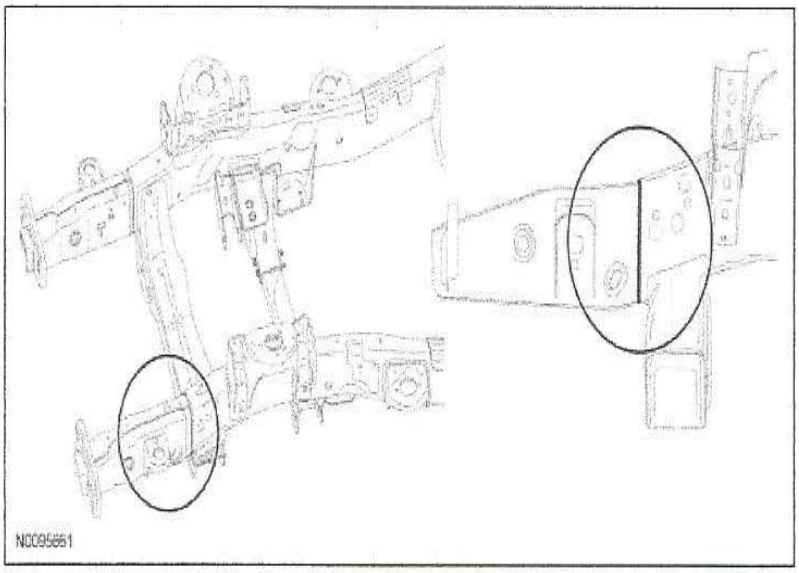

2013 Ford F150 Frame Extension

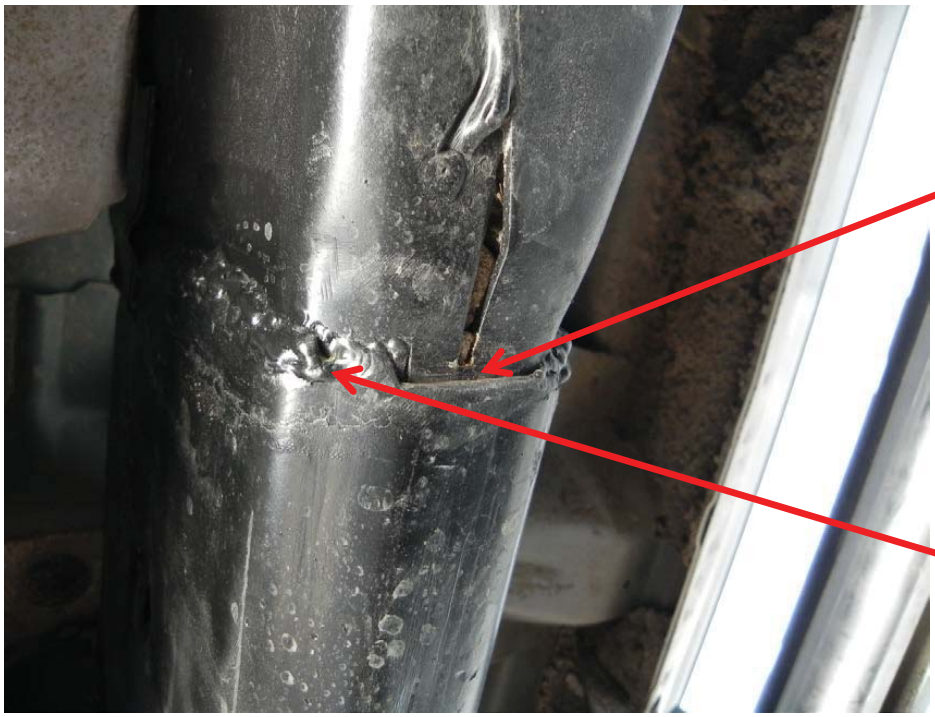

COLLISION INDUSTRY CONFERENCE

Result after repair—Other side frame extension fell off when vehicle hit a rut. Vehicle was a total loss.

Chart for Choosing the correct MIG wire size for the thickness of the steel.

Diagram 4: Welding Wire Thickness Chart

MATERIAL THICKNESS	RECOMMENDED WIRE SIZES						
	MIG SOLID WIRE				GASLESS FLUX-CORED WIRE		
	.024"	.030"	.035"	.045"	.030"	.035"	.045"
24 Gauge (.025)	■						
22 Gauge (.031)	■	■			■		
20 Gauge (.037)	■	■			■	■	
18 Gauge (.050)	■	■	■		■	■	
16 Gauge (.063)		■	■		■	■	■
14 Gauge (.078)		■	■	■	■	■	■
1/8" (.125)		■	■	■		■	■
3/16" (.188)			■	■		■	■
1/4" (.25)			■	■			■
5/16" (.313)			■	■			■
3/8" (.375)			■	■			■
1/2" (.5)			■	■			■

Multi-pass welding or a beveled joint design may be required on material thickness 3/16" and greater depending on your welding machine's amperage capability.

Lack of Penetration welding .024 wire on 1/8 steel.

COLLISION INDUSTRY CONFERENCE

Weld Penetration on the backside of a metal panel.

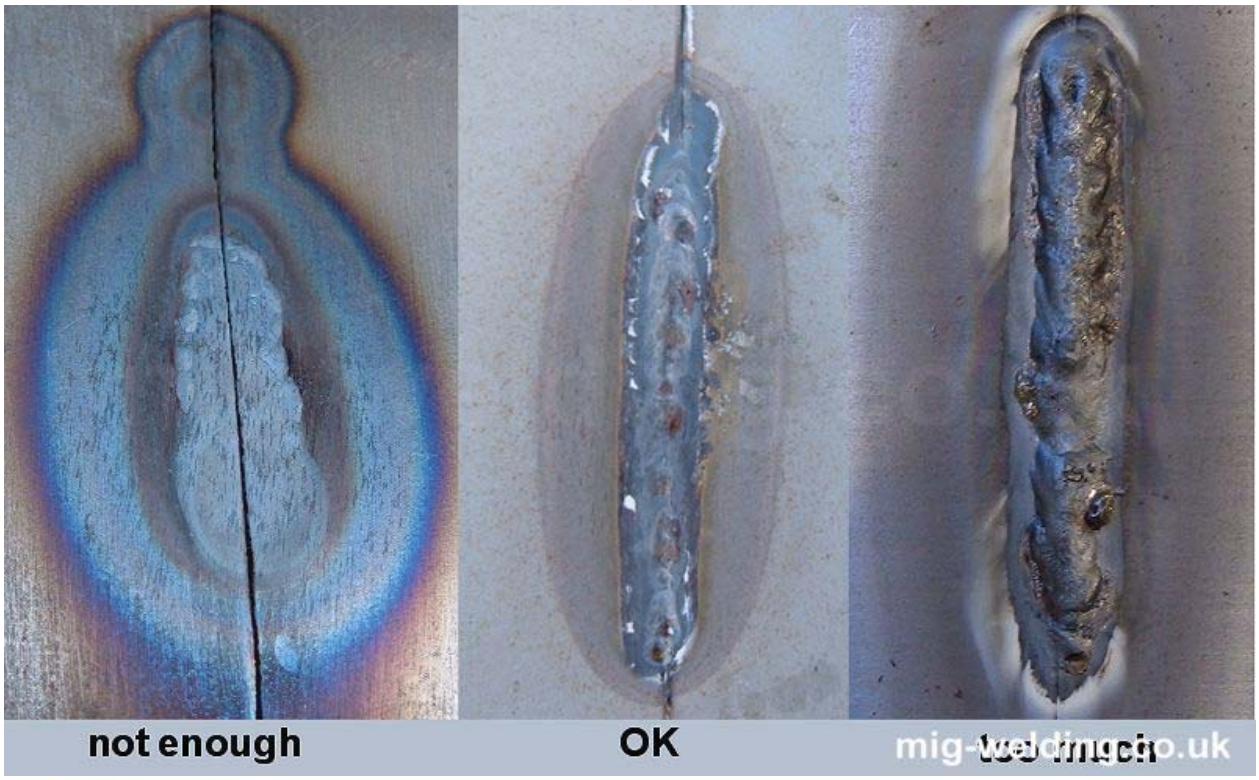

COLLISION INDUSTRY CONFERENCE

Replacing a quarter panel on a Toyota Camry

COLLISION INDUSTRY
CONFERENCE

Replacing a Quarter Panel on a 2016 Toyota Camry

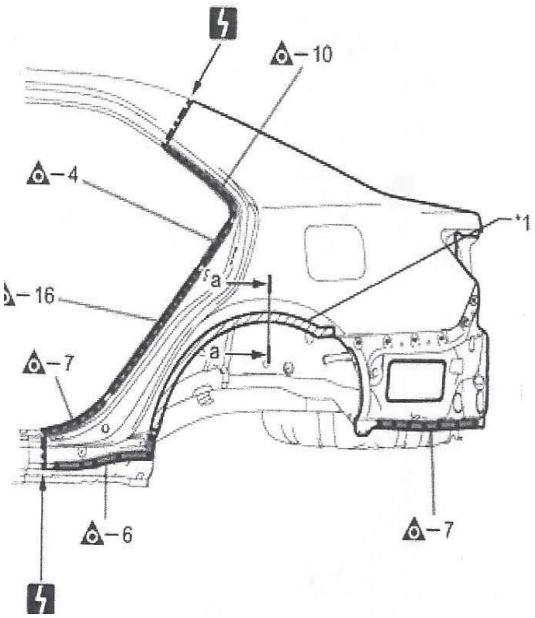

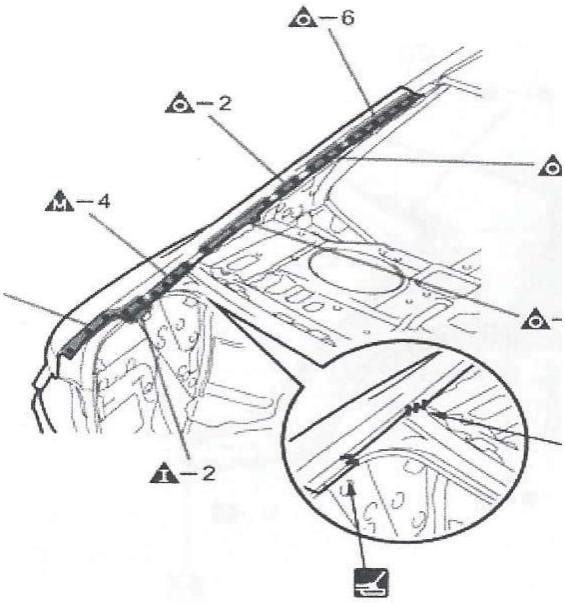

177

2021 | 2025 | 2026 | 2027 | 2029 | 2032 | 2038

COLLISION INDUSTRY CONFERENCE

Note: 8 additionalCRIBs are also needed to perform the quarter panel replacement

Additional Toyota Procedures need for a Quarter panel Replacement.

- CRIB 177 –Perform a zero calibration after a collision
- CRIB 2021—Glass Sealer
- CRIB 2025—Seam Sealer
- CRIB 2027—Pinch Weld Repair
- CRIB 2028 –Anti Chip Primer
- CRIB 2029 Repair Procedures for Rust Resistant Sheet Metal
- CRIB 2032—Anti Corrosion Treatment
- CRIB 2038--Adhesives

2009 Honda CRV

COLLISION INDUSTRY
CONFERENCE

Honda Repair Procedures for 2009 CRV

Roof Panel

Installation

1. Clamp the new roof panel, and tighten the mounting bolts.
2. Check the body dimensions.
   - Rear pillar gutter and rear panel position (see page 4-6)
   - Windshield/door opening (see page 4-7)
   - Tailgate opening (see page 4-7)
3. Tack weld the front and rear corner edge of the roof panel.
4. Temporarily install the roof side trim, windshield, doors, and tailgate, then check for differences in level and clearance. Check the operation of the tailgate.
5. Do the main welding.
   - From inside the vehicle, weld the roof panel stiffener (A) and rear roof rail (B).
   - Weld the front, rear, and side flange of the roof panel (C).
   - The roof area must be free of burrs and/or sharp edges to prevent damage to the side curtain airbag during deployment.

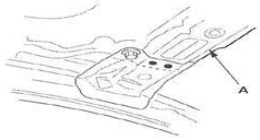

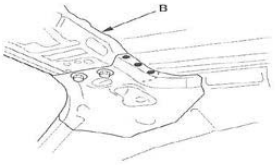

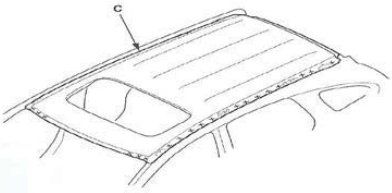

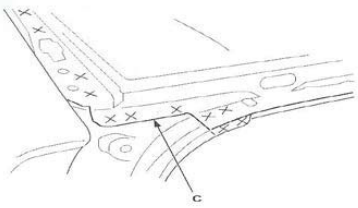

2009 Honda CRV showing separation from only using adhesive for the repair. Roof was not welded as per OEM Instructions.

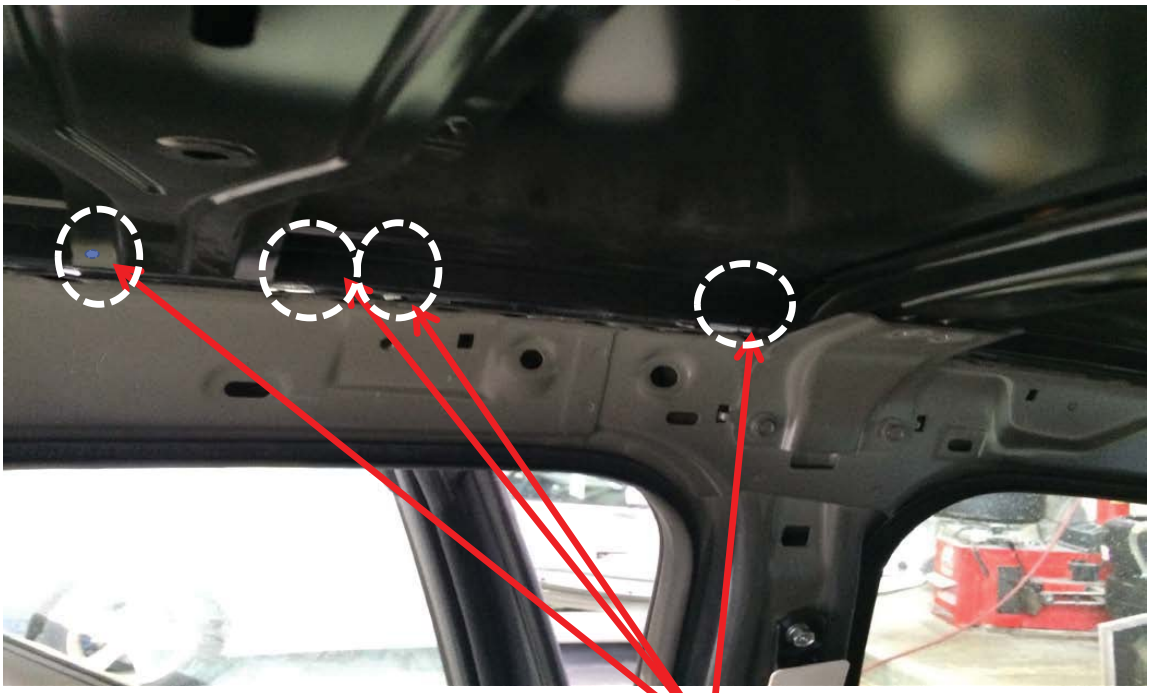

Light showing where roof has separated from roof rail

COLLISION INDUSTRY CONFERENCE